FIRE ALARM SYSTEM INPUT/OUTPUT MATRIX

SYSTEM OUTPUTS

	FACP ANNUNCIATION							NOTIFICATION							REQUIRED FIRE SAFETY CONTROL				
SYSTEM INPUTS	A	B	C	D	E	F	G	H	I	J	K	L	M	N	O	P	Q	R	S	T
1 FIRE ALARM SYSTEM AC POWER FAILURE					●	●			●			●								
2 FIRE ALARM SYSTEM LOW BATTERY					●	●			●			●								
3 OPEN CIRCUIT					●	●			●			●								
4 GROUND FAULT					●	●			●			●								
5 NOTIFICATION APPLIANCE CIRCUIT SHORT					●	●			●			●								
6 BUILDING MANUAL PULL STATIONS	●	●					●	●	●	●			●							
7 AREA SMOKE DETECTORS	●	●					●	●	●	●			●							
8 HVAC AIR DUCT SMOKE DETECTORS			●	●			●	●	●		●		●							
9 SPRINKLER TAMPER SWITCH			●	●			●		●		●									
10 SPRINKLER WATER FLOW IN BUILDING	●	●					●	●	●	●			●							
11 IT ROOM WATER FLOW	●	●					●	●	●	●										
12 IT ROOM FIRST SMOKE DETECTOR	●	●					●		●	●						●				
13 IT ROOM SECOND SMOKE DETECTOR	●	●					●		●	●						●				
14 IT ROOM TWO SMOKE DETECTORS								●	●											
15 IT ROOM PULL STATION	●	●					●	●	●	●						●				
16 IT ROOM LOW AIR PRESSURE	●	●					●	●	●	●						●				
17 IT ROOM LOW AIR PRESSURE AND TWO SMOKE DETECTORS								●	●								●			
18 IT ROOM LOW AIR PRESSURE AND PULL STATION								●	●								●			
19 IT ROOM HIGH AIR PRESSURE			●	●			●		●		●									
20 VESDA SYSTEM - ALERT CONDITION			●	●			●		●		●				●					
21 VESDA SYSTEM - ACTION CONDITION	●	●					●		●	●					●			●		
22 VESDA SYSTEM - FIRE 1 CONDITION	●	●					●	●	●	●					●			●		
23 VESDA SYSTEM - FIRE 2 CONDITION	●	●					●	●	●	●				●	●			●		
24 VESDA SYSTEM - MINOR FAULT			●	●			●		●		●									
25 VESDA SYSTEM - URGENT FAULT			●	●			●		●		●									
26 VESDA SYSTEM - POWER SUPPLY TROUBLE			●	●			●		●		●									
27 VESDA SYSTEM - MANUAL PULL STATION	●	●					●	●	●					●	●	●		●		
28 FIKE CAMERA ALARM	●	●					●	●	●	●										
29 FIKE CAMERA TROUBLE			●	●			●		●		●									
30 WATERFLOW - MANUAL HOSE STATIONS	●	●					●	●	●	●										
31 TAMPER SWITCH - MANUAL HOSE STATIONS			●	●					●		●									
32																				
	A	B	C	D	E	F	G	H	I	J	K	L	M	N	O	P	Q	R	S	T

1 ACTUATE COMMON ALARM SIGNAL INDICATOR
2 ACTUATE AUDIBLE ALARM SIGNAL
3 ACTUATE COMMON SUPERVISORY SIGNAL INDICATOR
4 ACTUATE SUPERVISORY SIGNAL
5 ACTUATE COMMON TROUBLE SIGNAL INDICATOR
6 ACTUATE AUDIBLE TROUBLE SIGNAL
7 ACTUATE ZONE OR DEVICE SIGNAL INDICATOR
8 DISPLAY CHANGE OF STATUS
9 TRANSMIT FIRE ALARM SIGNAL TO CENTRAL STATION
10 TRANSMIT SUPERVISORY SIGNAL TO CENTRAL STATION
11 TRANSMIT TROUBLE SIGNAL TO CENTRAL STATION
12 SHUT DOWN RESPECTIVE AIR HANDLING EQUIPMENT
13 ACTUATE VESDA TIP AUTOSTORE (60 SECOND DELAY)
14 ACTUATE VESDA ALERT LIGHT HORNS/STROBE AT AUTOSTORE
15 PRE-ALERT ALARM
16 RELEASE 2 ROOM DOUBLE INTERLOCK SOLENOID
17 AUTOSTORE ROBOT RECALL

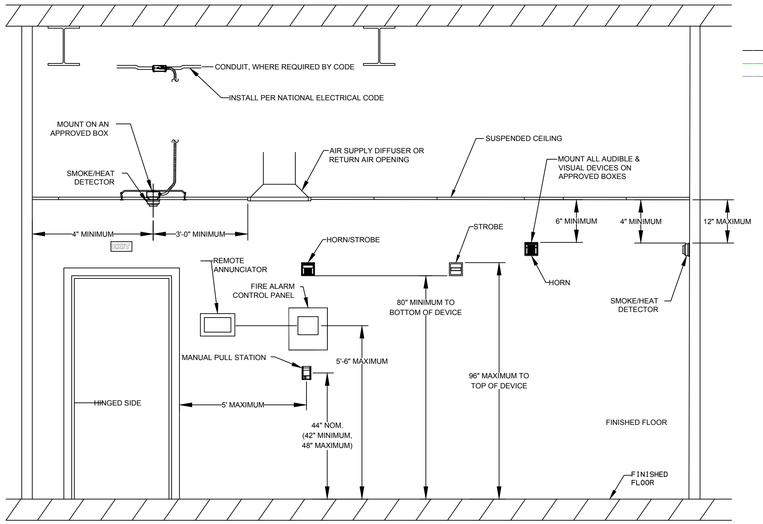

DEVICE INSTALLATION DETAILS
MUST MEET NFPA 72 REQUIREMENTS

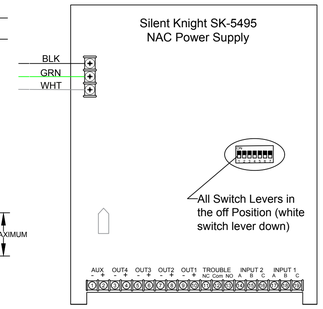

SK-5495 DIPSWITCH SETTINGS

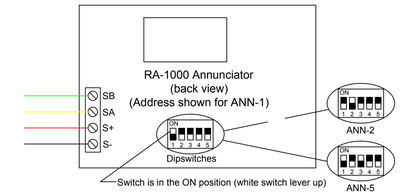

RA-1000 ANNUNCIATOR CONNECTIONS AND DIPSWITCH SETTINGS

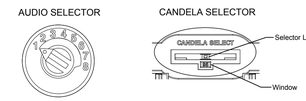

Note: All Horn Strobes and Strobe only devices must be adjusted prior to installation.
Set Audio Selectors on all horn strobes to position 1 as shown for Temporal High
Set Strobe Settings to the proper Candela Setting based on information contained in Drawing FA-1. Set Candela Selector Lever so that the proper candela setting shows in the window below the Selector Lever.

For reference:
All ceiling mounted horn strobes (PC2RL) are to be set at 177 Candela setting.
All wall mounted horn strobes (P2RL) are to be set at 75 Candela setting
All wall mounted strobe only (SRL) are to be set at 15 Candela setting

AUDIO & VISUAL DEVICE SETTINGS

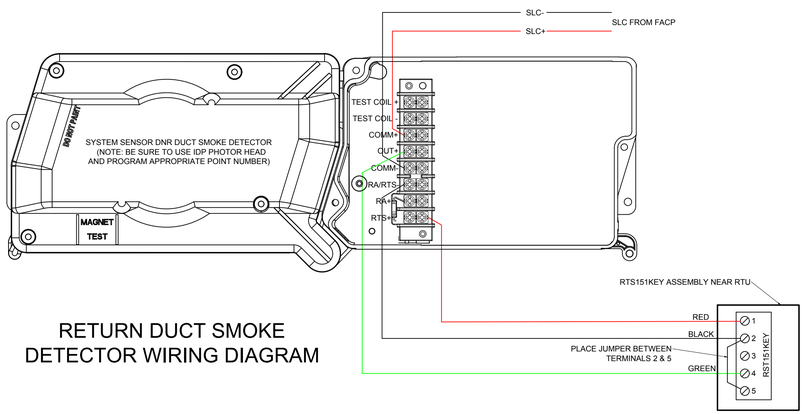

RETURN DUCT SMOKE DETECTOR WIRING DIAGRAM

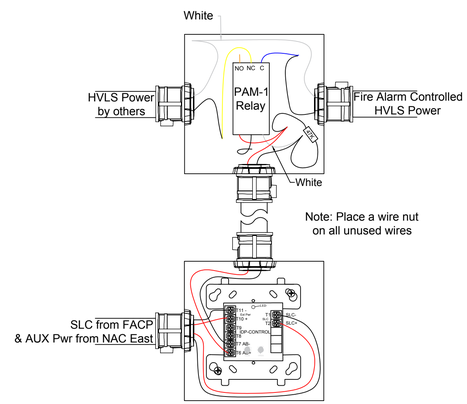

HVLS Fan Wiring Details

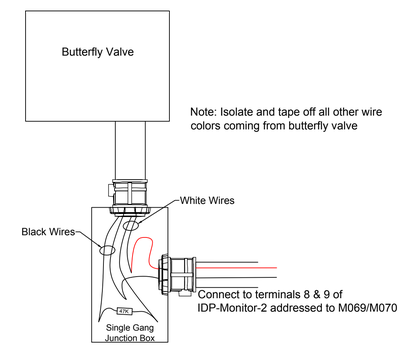

IT Room Butterfly Valve Wiring Details

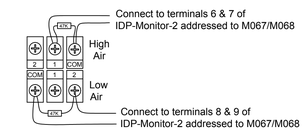

IT Room Supervisory Pressure Switch Wiring Details

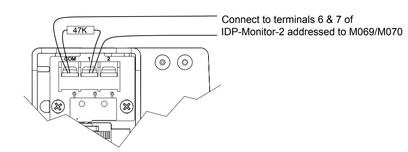

IT Room Waterflow Pressure Switch Wiring Details

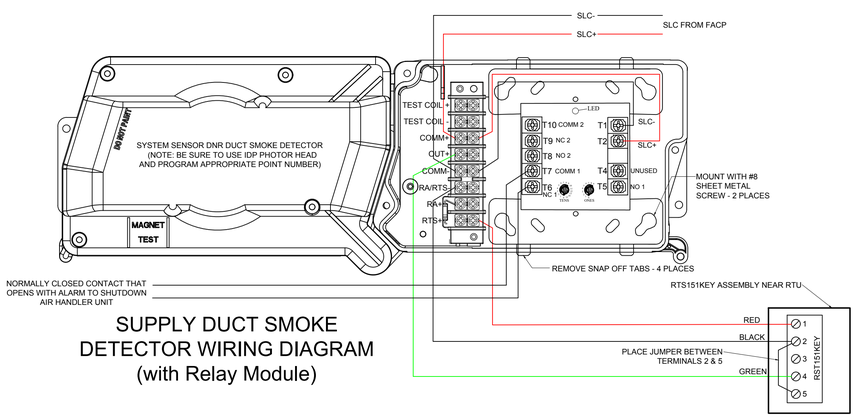

SUPPLY DUCT SMOKE DETECTOR WIRING DIAGRAM (with Relay Module)

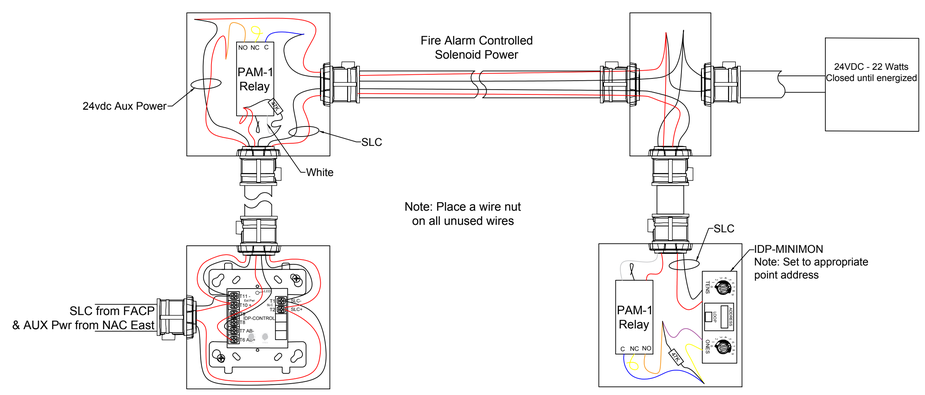

IT Room Solenoid Wiring Details

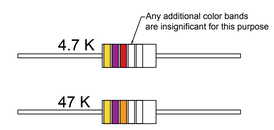

EOL (End of Line) Resistor Color Code

TITLE: FIRE ALARM SYSTEM PLAN

SYSTEMS SPECIALISTS INC
155 N. Main Street, Collierville, TN 38017
(901)854-0510
TN-C1472/QA-0358

This Fire Alarm System shall be installed in compliance with: NFPA72, 2013 ed, and all wiring shall comply with NFPA70, Article 760.

LAST REVISION: 2/18/2021
BY: RGG
CHECKED BY: PEH

FA-3